GATTI

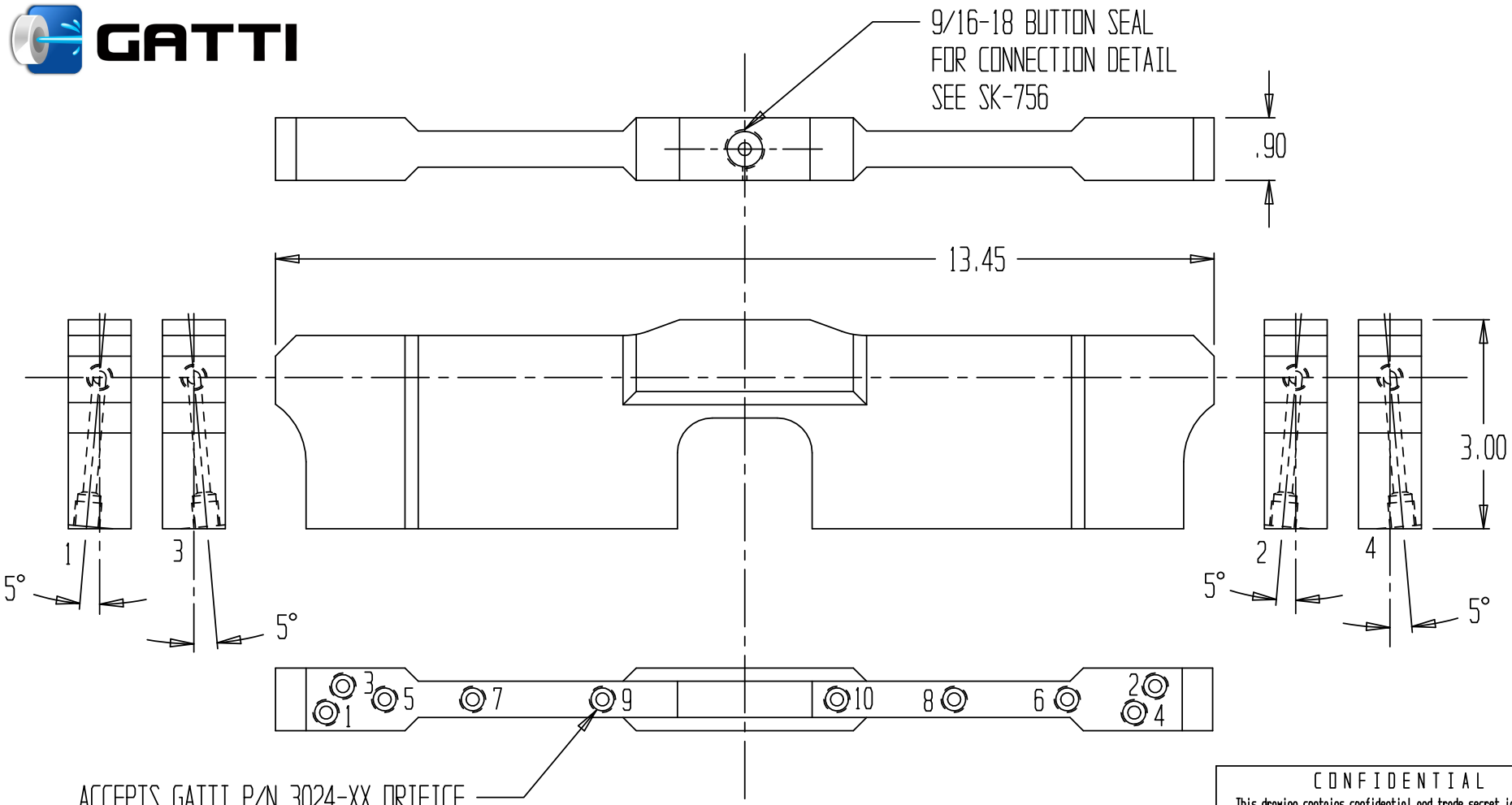

ORIFICE LOCATIONS 5 THRU 10
ARE STRAIGHT

CONFIDENTIAL

This drawing contains confidential and trade secret information, is the property of Aurele M. Gatti Inc., and is given to the receiver in confidence. The receiver by reception and retention of the drawing accepts the drawing in confidence and agrees that, except as authorized in writing by Aurele M. Gatti Inc., it will (1) not use the drawing or any copy thereof or the confidential or trade secret information therein; (2) not copy the drawing; (3) not disclose to others either the drawing or the confidential or trade secret information therein; and (4) upon completion of the need to retain the drawing, or upon demand, return the drawing, all copies thereof, and all material copied therefrom.

UNLESS OTHERWISE SPECIFIED:
DIMENSIONS ARE IN INCHES TOLERANCES ON DIM SURFACE FINISH 63
2 PL DEC +/-.01 3PL DEC +/-.005 ANGLES +/-.5

AURELE M. GATTI, INC.
TRENTON, NEW JERSEY

ECO - DATE													MATERIAL:	SCALE	DRAWN/DESIGN	DATE	CHECKED/TOOLING	APPROV
															L HEWITT	9-11-08		
REV.														NAME			DWG. NO.	
														GATTI P/N 3744 12" 10-JET			SK-887	